ZF / CHERRY RED HALL SENSOR
HAL-501

RACEWORKS™
PASSION FOR PERFORMANCE

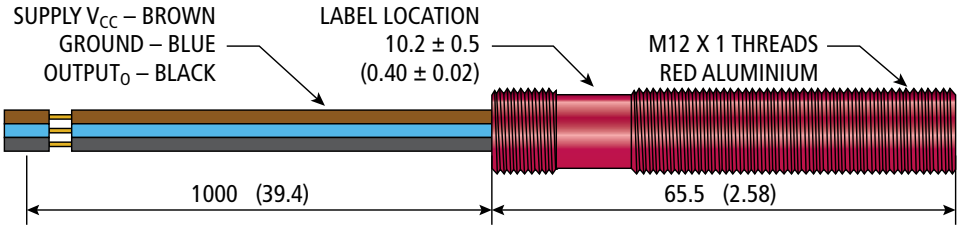

FEATURES

- From near zero speed up to 15 kHz sensing capability.
- 10-bit dynamic threshold direction offers:
  - Automatically adjusting magnetic range
  - Self-compensating to target geometry
- Compatible with unregulated power supply.
- RoHS compliant. ■ IP67.
- Typical air gap of 1.5 mm*.

** With recommended target type. See drawing.*

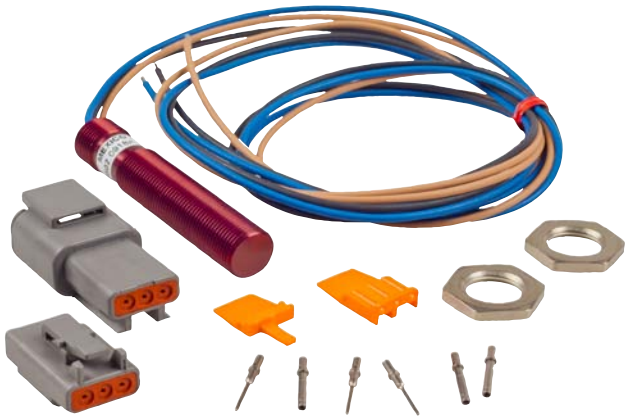

Connector Kit CPS-119 included

ENVIRONMENTAL SPECS

Vibration	Sinusoidal, 15 g max from 40 Hz to 2 kHz
Mechanical Shock Resistance	50 g
Maximum Speed Detection	15 kHz
Operating Temperature (GS100502)	-40 °C to 125 °C (-40 °F to 257 °F)
Storage Temperature	-40 °C to 125 °C (-40 °F to 257 °F)
Ingress Protection	IP67

ELECTRICAL SPECS

Operating Supply Voltage	5 to 24 VDC
Max Input Voltage	30 VDC
Max Reverse Voltage	24 VDC
Supply Current	3 mA typ., 6 mA Max
Output Sink Current	20 mA max
Recommended Pull-Up Resistor	See chart.

NOTE: An external pull-up resistor is required, the value of which is dependent on the supply voltage. The resistor should be connected between the output and Vcc. Refer to the wiring diagram for lead colours or pin numbering as applicable.

RECOMMENDED EXTERNAL PULL-UP RESISTOR

Volts DC	5	9	12	15	24
Ohms	1k	1.8k	2.4k	3k	3k

OPEN COLLECTOR SINKING BLOCK

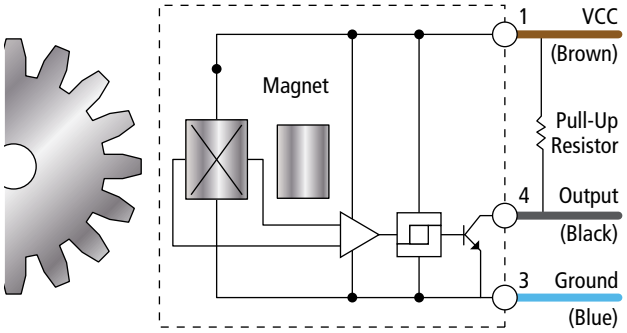
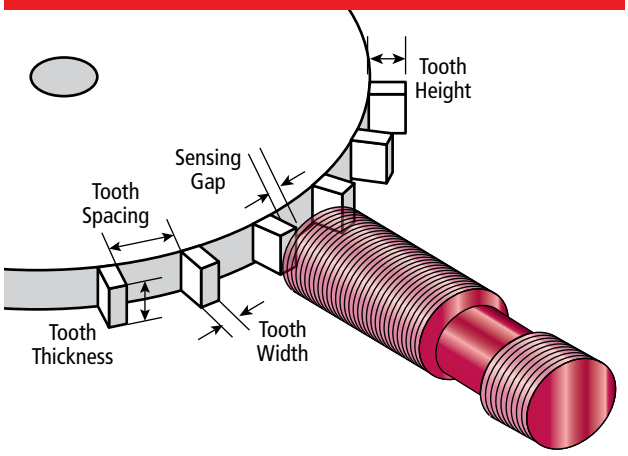
INSTALLATION